6820

Fracture Characterization Study at the Raymond Quarry Site

K. Karasaki and B. Freifeld

The U.S. Department of Energy (DOE) and the Atomic Energy of Canada (AECL) have entered into a bilateral agreement for cooperative research and development in the area of high-level nuclear waste management. Under the currently implemented Subsidiary Agreement No. 2, there are eight technical tasks that DOE and AECL agreed to conduct cooperatively. LBL's responsibility is to co-lead with the USGS a task entitled "Development of Multiple-Well Hydraulic Test and Field Tracer Test Methods." The purpose of the task is to develop and test a multidisciplinary approach to the characterization of groundwater flow in heterogeneous and complexly fractured rocks. More specifically, the objectives of the task are (1) to test and improve the field procedures, equipment, and analysis method to be used at multiwell test sites at Yucca Mountain; (2) to improve understanding of the fundamental processes that govern flow and transport in heterogeneous systems; (3) to improve subsurface imaging techniques; (4) to improve understanding of coupled hydromechanical processes that may be significant in the Yucca Mountain site-scale groundwater flow system; and (5) to exchange technology and comparison of approaches to the modeling of groundwater flow in fractured rocks with the AECL. As the first activity of the task, we have established a dedicated field prototype site in Raymond, California. In the following sections, the present status and future plans of the tests planned at the site are described with a focus on hydraulic and tracer-testing activity.

RAYMOND QUARRY SITE

The Raymond Quarry Site is located in the Sierra Nevada foothills, approximately 3.2 km east of Raymond, California, and 100 km north of the city of Fresno (Figure 1). The principal rock type at the site is the so-called granodiorite of Knowles, which is light gray, of uniform grain size, and widely used for a building material in California (Bateman and Sawka, 1981). The property of the site is owned by the Coldspring Granite Company, which operates a quarry nearby. A cluster of nine boreholes have been drilled so far. The wells are laid out in an inverted V pattern with radially increasing spacing between boreholes (Figure 2). The spacing of 25, 50, 100, and 200 ft from the central well was chosen to allow the study of scale effects on the flow and transport parameters. The angle between the southwest and southeast legs is approximately 60 degrees. Two of the wells, SW2 and SE2, are drilled to a diameter of 10 in., with the remaining wells drilled to 6 in. The wells are cased to approximately 30 ft and vary in depth between 250 and 300 ft. The water level is normally between 6 and 11 ft below the casing head.

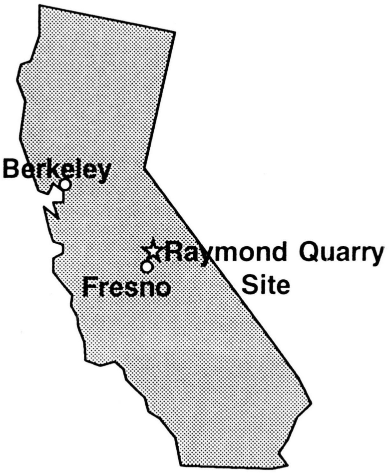

Figure 1. Location of the Raymond Quarry Site. [XBL 935-770]

PRELIMINARY INVESTIGATIONS

Geophysical logs obtained for the nine boreholes include natural gamma, resistivity, acoustic televiewer, caliper, and deviation. An intra-borehole flow survey was also conducted using a heat-pulse flow meter (Paillet, personal communication, 1992). Fish-eye television camera logs were run in all nine holes. In addition two visual-band borehole scanner surveys were conducted using different systems in well 0-0. The preliminary information is being

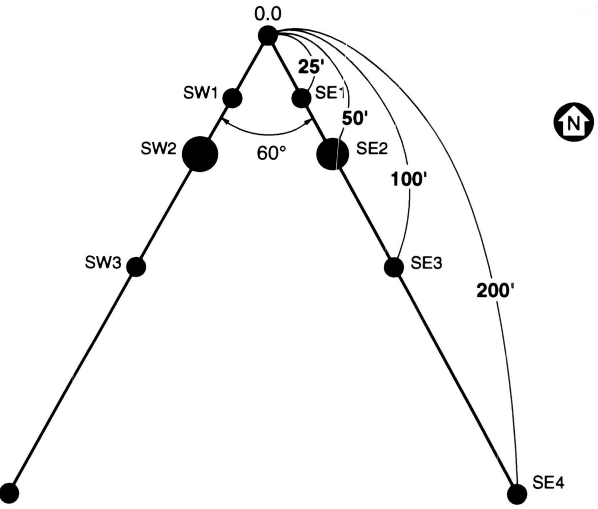

Figure 2. Layout of the wellfield at the Raymond Quarry Site. [XBL 935-771]

used to determine the hydraulic tests to be conducted and the locations for setting packers. In particular, the heat-pulse flow survey has been very useful in pinpointing inflow locations within the well. It appears that there are two major conductive zones: one at a depth of about 100 ft and the other between 180 and 200 ft. These conductive zones are associated with a few highly fractured zones intersecting each wellbore.

For reconnaissance purposes, interference tests have been conducted by pumping in an open well, 0-0, with the observation wells being divided into upper and lower zones using a pneumatic packer. The objectives of the tests were to see if the wells are hydraulically connected to each other and to see if there are conductive zones in the deeper parts of the wells that are not surficial features, such as weathered zones. Figure 3 shows the data for an interference test using the SE well array. Because the *x*-axis scale is normalized to a square of the radial distance, the curves that connect the pumping period data points should fall on top of each other if the aquifer is homogeneous. However, as can be seen from the figure, the curves don't entirely fall on top of each other. It seems that there is a moderate degree of heterogeneity of up to a factor of 3. Another observation is that the larger the time or the distance from the pumping well, the closer the pressure responses in the upper and lower zone in the same well. This indicates that the features in the upper and lower zone identified by the geophysical logs are hydraulically connected to one another.

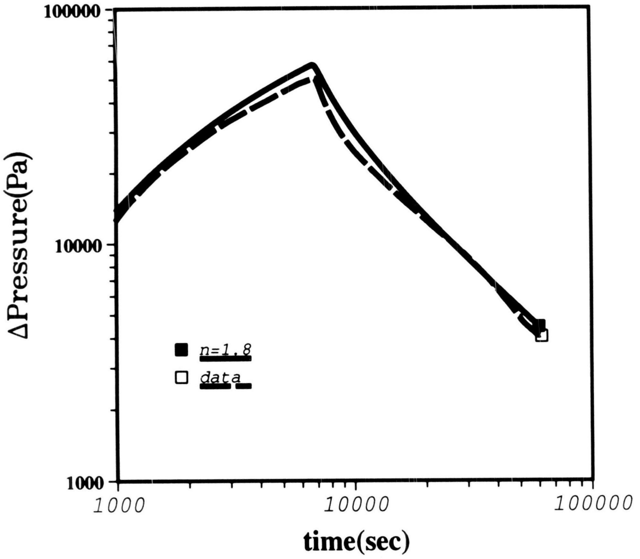

Figure 3. Interference test data with time normalized with respect to the square of radial distance from the pumping well. [XBL 935-772]

FRACTAL DIMENSION ANALYSIS

The problem of scaling up is an essential element in the site characterization effort. Field tests cannot be designed to stress a large enough volume of rock, nor can enough boreholes be drilled to sample and test every aspect of the site. Scaling up is extremely difficult in a highly heterogeneous system, and one needs to make some assumptions regarding the structure of the heterogeneity at the larger scale. One appealing assumption is that the heterogeneity has a fractal structure.

Barker (1988) solved the equation of flow to a well in fractional dimension space (as opposed to integral dimension space, i.e., two- or three-dimensional space) and presented type curves for various dimensions. The solution to the generalized radial flow equation in Laplace space is

$$\bar{h}(r,p) = \frac{Q_0 r^{\nu} K_{\nu}(\lambda r)}{p K_f b^{3-n} \alpha_n K_{\nu-1}(\lambda r_w)(\lambda r_w)^{1-\nu} \lambda^{\nu}} , \qquad (1)$$

where

$$\nu = 1 - n/2 , \qquad (2)$$

$$\lambda^2 = p\frac{S_{sf}}{K_f} , \qquad (3)$$

and where p is the Laplace variable, Q_0 is the pump rate, r the distance to the pump well, r_w the well radius, α_n the area of a unit sphere in n-dimensional space, b the extent of the flow region, and K_ν the modified Bessel function; K_f and S_{sf} are the standard hydraulic conductivity and specific storage, respectively. One can intuitively draw an association between a fracture system and a fractal. Simply put, a fractal implies that the space is fragmented or irregular, which is the very characteristic of fracture systems. Polek (1990) showed through numerical studies that a flow system with a fractal structure displays a characteristic signature in the well-test response curve as predicted by Barker.

Some of the interference test data was analyzed by evaluating Eq. (1) using the numerical inversion algorithm of Stehfest. The superposition principle was used to analyze a multi-rate pump test and a pump-and-recover test. A sample test and simulation are shown in Figure 4. The dimension had been chosen by examining the slope of the late-time pump data plotted on a log-log graph. It has been estimated that the dimension of the particular case is 1.5.

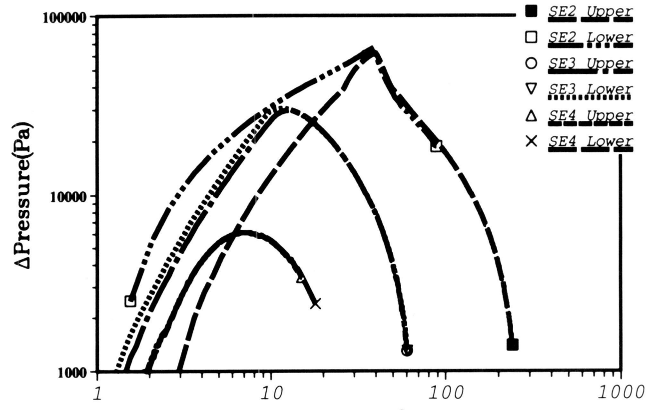

Figure 4. Data and a simulation using a fractional dimensional flow model for an interference test between 0-0, the pump well, and SW1, the observation well. [XBL 935-773]

HYDRAULIC AND TRACER TEST EQUIPMENT

During field testing many variables need to be monitored continuously. These include pressures of both water and air, flow rates, temperatures, and chemical concentration for tracer tests. The quality of data is based upon the accuracy of the sensor and the precision with which it is transmitted and converted into numerical information. All equipment must be integrated and the accuracy of each measurement known so that total error bounds for all calculations can be assessed.

The equipment used at the Raymond Quarry Site includes multipacker strings of Roctest packers with feed throughs for electrical and hydraulic communication between test zones. Differential pressures up to 150 psi can be maintained between adjacent zones. Pressure measurement is obtained with Paroscientific DigiQuartz transducers with an accuracy of 0.01% or with Druck Depth Sensors with an accuracy of 0.1%. Flow rates are controlled with a Kates Flow Controller to 1.5% of its set point. Data are transferred over RS-232 connections using intelligent transmitters or sent to a Keithley Model 2001 Digital Multimeter through a Keithley Model 7001 Multiplexer operating on an IEEE488.2 bus. All controlled parameters and data are logged on a 486 PC running data-acquisition software called "Labview for Windows." Figure 5 is a schematic diagram of the field equipment.

FUTURE PLANS

Multizone, cross-borehole hydraulic and conservative tracer tests are being designed so that the heterogeneous and discontinuous flow and transport pathways can be characterized. By alternately stressing different intervals in various holes and recording pressure transients in all the intervals in a crude tomographic fashion, it is expected that the hydraulic structure between the holes can be estimated. The results of different tests will be compared to see what benefit is gained by using complicated multipacker tests as opposed to the various open-hole tests commonly used. The data from single well tests should provide information

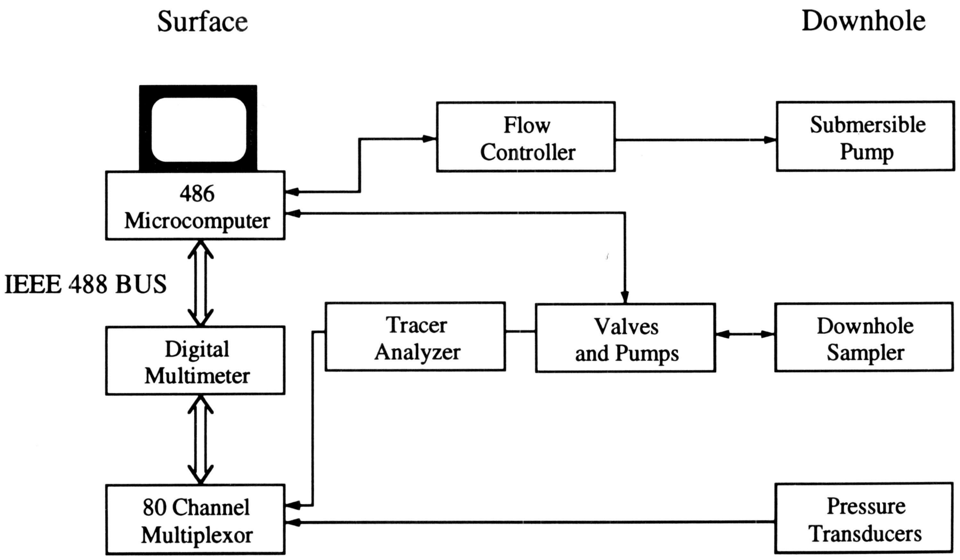

Figure 5. Schematic diagram of data acquisition system used at the Raymond Quarry Site. [XBL 935-774]

on local horizontal and vertical spatial variability of hydraulic properties. Long-term pumping tests are planned to assess the existence of a scale-dependent permeability structure, taking advantage of the well arrays with radially increasing spacing.

Conservative tracer tests will be carried out in much the same way by creating a convergent flow field into an interval and releasing various tracers from other intervals. Groundwater flow paths will be estimated by analyzing the tracer arrivals from the various release points. Both organic and inorganic tracers are planned for use, and the sampling and measurement methods are currently under development. The data from various tests will be used to construct a coherent hydrologic model of the site. Optimization algorithms such as simulated annealing will be used to invert both hydraulic and tracer-test data. Further experiments will then be conducted to test the accuracy and applicability of the model.

ACKNOWLEDGMENTS

Credits are due to the following people for participating in the project at various stages and capacities: Sally Benson, Wes Bethel, Preston Holland, Chris Kim, Ernie Majer, Steve Martel, Don Lippert, Ray Solbau, and Peter Zawislanski.

REFERENCES

Barker, J., 1988. A generalized radial flow model for hydraulic tests in fractured rock. Water Resour. Res., v. 24, no. 10, p. 1796–1804.

Bateman, P.C., and Sawka, W.N., 1981. Raymond Quadrangle, Madera and Mariposa Counties, California—Analytic data. USGS Professional Paper 1214.

Polek, J., 1990. Studies of the hydraulic behavior of hierarchically fractured rock geometries. M.S. Thesis, Lawrence Berkeley Laboratory Report LBL-28612.

6821

A Tool for Studying Two-Phase Flow in Fracture Networks

K. Karasaki, S. Segan, and K. Pruess

Problems concerning two-phase flow in fractured media are commonly encountered in oil fields, geothermal fields, groundwater reservoirs, and other geologic media of engineering interest. In recent years, considerable attention has been focused on the storage of radioactive wastes in fractured rock. In the United States, the site for the potential high-level nuclear waste repository is in the unsaturated, fractured welded tuff at Yucca Mountain, Nevada. One possible scenario by which radionuclides could reach the accessible environment is transport by groundwater through the unsaturated zone to the water table and then into the saturated zone. Therefore, accurate characterization of the two-phase flow behavior of the fractured rock mass is vital to the safety of such an operation. The most direct information regarding the two-phase flow characteristics can be obtained by conducting *in situ* cross-hole pneumatic tests. However, analysis of the test results is extremely difficult, because the two-phase flow phenomena in a fractured rock are not well understood and the initial saturation condition and the intrinsic rock properties, such as fracture and matrix permeability, are not known *a priori*.

A numerical model is an essential tool for assessing the performance of the potential repository for tens of thousands of years, during which the spent fuel remains highly radioactive. To model the volume of rock within the 5-km distance from the potential repository perimeter, given the current computational capability, a node would have to be as large as 200 m × 200 m × 20 m in order to be feasible. For each nodal volume the two-phase flow parameters, such as relative permeability and capillary pressure, are necessary inputs for a two-phase flow simulator. It is very important, therefore, to develop an understanding of how water and air flow in fractures and to accurately represent a volume of rock that contains a network of fractures for field test interpretation and reliable performance assessment modeling. Persoff et al. (1991) carried out a laboratory investigation of two-phase flow in transparent replicas of rock fractures. Pruess and Tsang (1990) and Kwicklis and Healy (1992) numerically studied two-phase flow in a single fracture. Kwicklis and Healy constructed a simple network using the parameters obtained from their single fracture simulation. In the present report, we outline a tool for studying two-phase flow in numerically generated networks, showing how networks are generated randomly and how the flow path for each phase is tracked rigorously using accessibility criteria based on the connection to the boundary and the different rules at the intersections. We then describe the assumptions involved, how the networks are generated, how the two-phase flow is simulated in them, and provide some sample results.